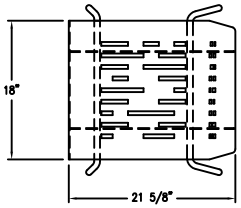

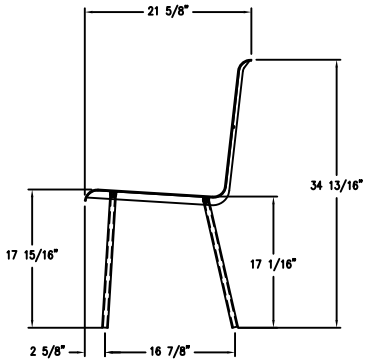

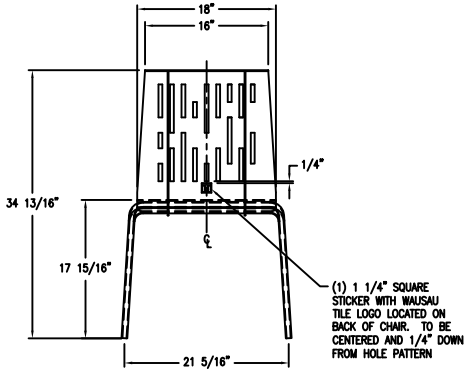

WAUSAU TILE SITE FURNISHINGS

P.O. BOX 1520 WAUSAU, WISCONSIN 54402-1520 800/289-8720
E-MAIL: WRE@WAUSAUTILE.COM
WEB SITE: WWW.WAUSAUTILE.COM

REVISIONS									
NO.	DATE	BY	NO.	DATE	BY	DRAWN BY M JOHNSON	JOB	MATERIAL STEEL
1	1/9/10	PAW	4			JOB NO.	LOCATION	WEIGHT
2			5			SCALE AS NOTED	UNLESS OTHERWISE SPECIFIED DIMENSIONS ARE IN INCHES ANGLES ±0.5° FRAC.±1/64" 2 PL ±0.01 3 PL ±0.005	DATE 10/15/09	ITEM NO. WS-211 CHAIR WITH S-E PATTERN
3			6				FINISH OPTIONS		DWG. NO. 350227