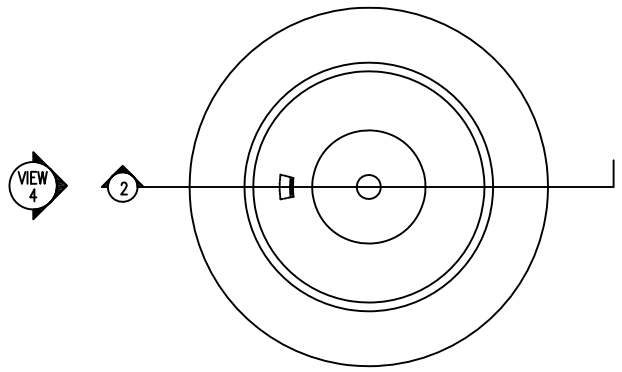


1 PLANTER TOP VIEW
Scale: 1 1/2" = 1'

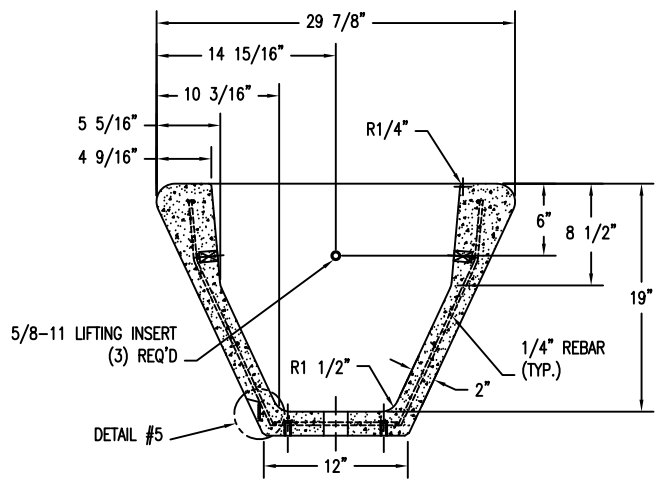


2 PLANTER CROSS SECTION
Scale: 1 1/2" = 1'

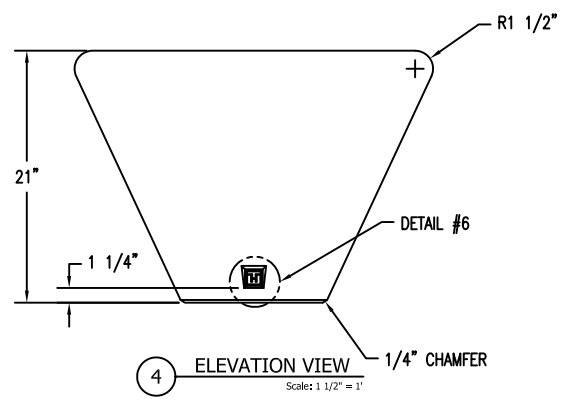


4 ELEVATION VIEW
Scale: 1 1/2" = 1'

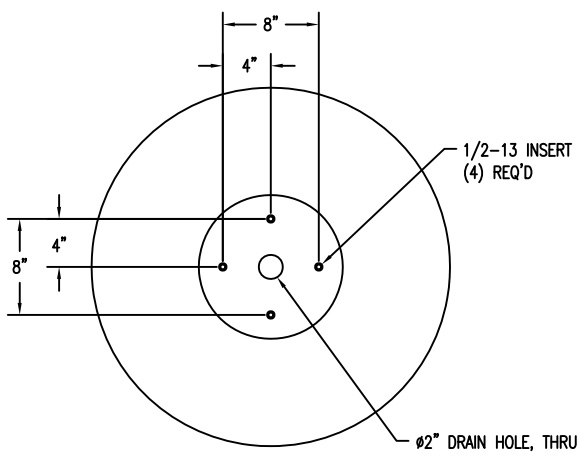


3 PLANTER BOTTOM VIEW
Scale: 1 1/2" = 1'

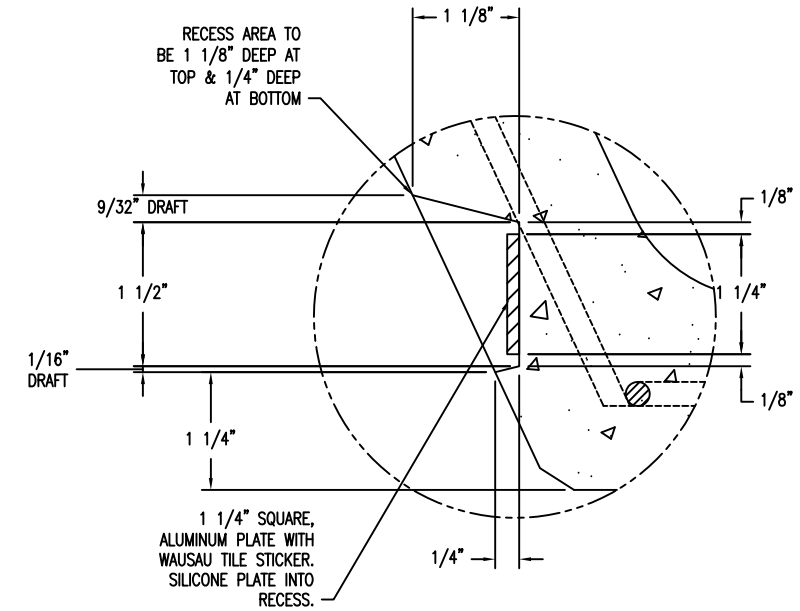


5 BLOWN UP CROSS SECTION OF RECESS AREA
Scale: 1" = 1"

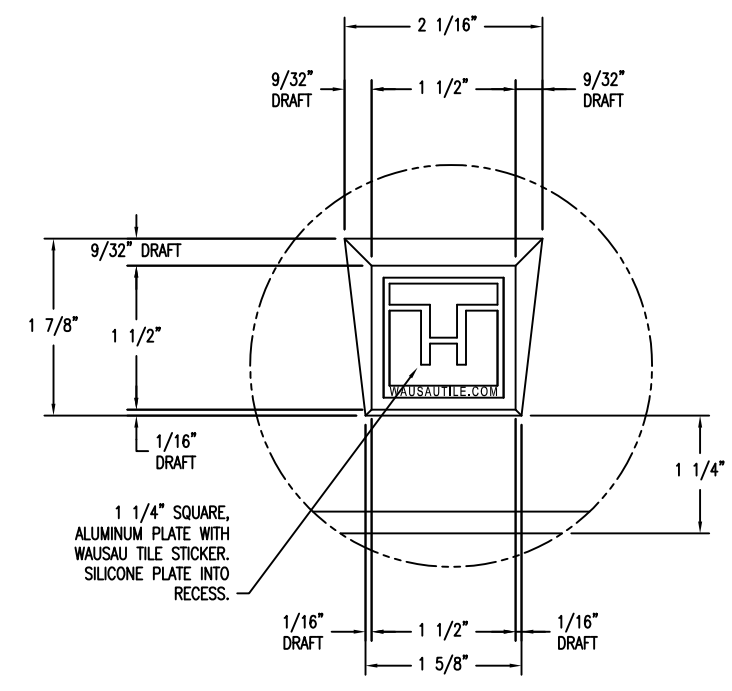


6 FRONT VIEW OF RECESS BLOCK OUT FOR EMBLEM
Scale: 1" = 1"

**WAUSAU TILE SITE FURNISHINGS**

P.O. BOX 1520 WAUSAU, WISCONSIN 54402-1520 800/388-8728
E-MAIL: WTILE@WAUSAUTILE.COM
WEB SITE: WWW.WAUSAUTILE.COM

| REVISIONS | | | | | | DRAWN BY MJS | JOB | | MATERIAL CONCRETE |
|---|---|---|---|---|---|---|---|---|---|
| NO. | DATE | BY | NO. | DATE | BY | JOB NO. | LOCATION | | WEIGHT 400 LBS |
| 1 | 12/15/09 | P.A.W. | 4 | | | SCALE AS NOTED | UNLESS OTHERWISE SPECIFIED DIMENSIONS ARE IN INCHES TOLERANCES: ± 1/8" | DATE 11/4/09 | ITEM NO. WS-105 |
| 2 | | | 5 | | | | | FINISH OPTIONS | DWG. NO. 1 OF 1 |
| 3 | | | 6 | | | | | | |