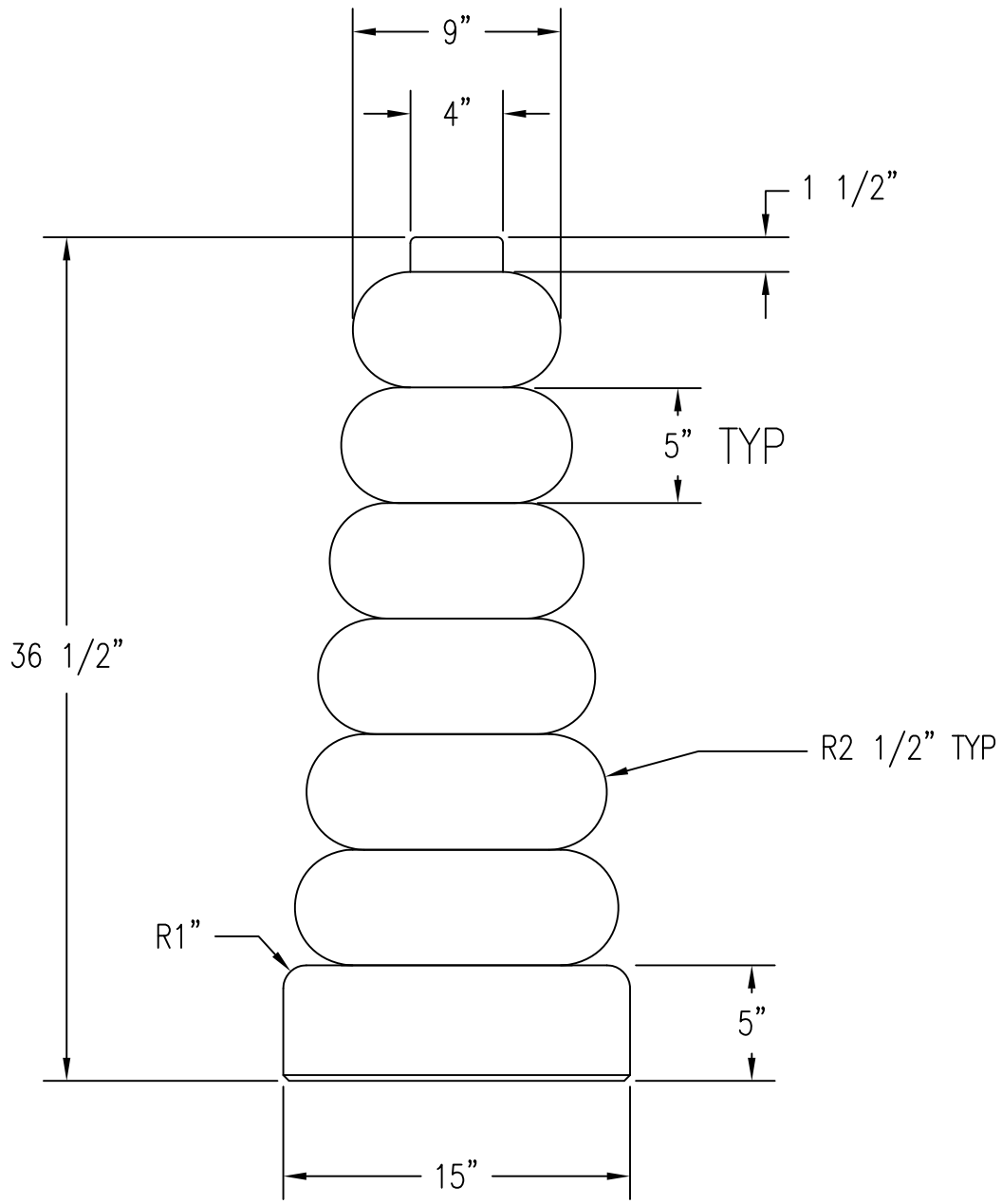

1 FRONT VIEW - STACKING RINGS

Scale: 1-1/2" = 1'

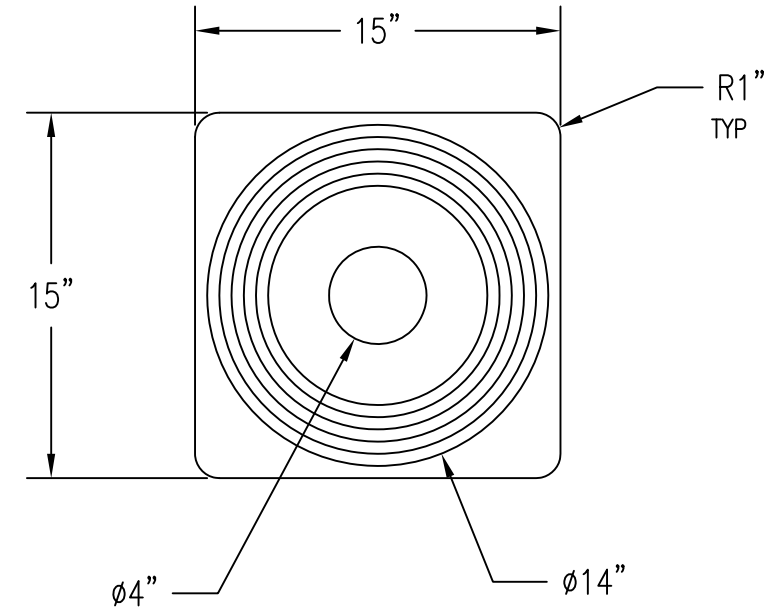

2 TOP VIEW - STACKING RINGS

Scale: 1-1/2" = 1'

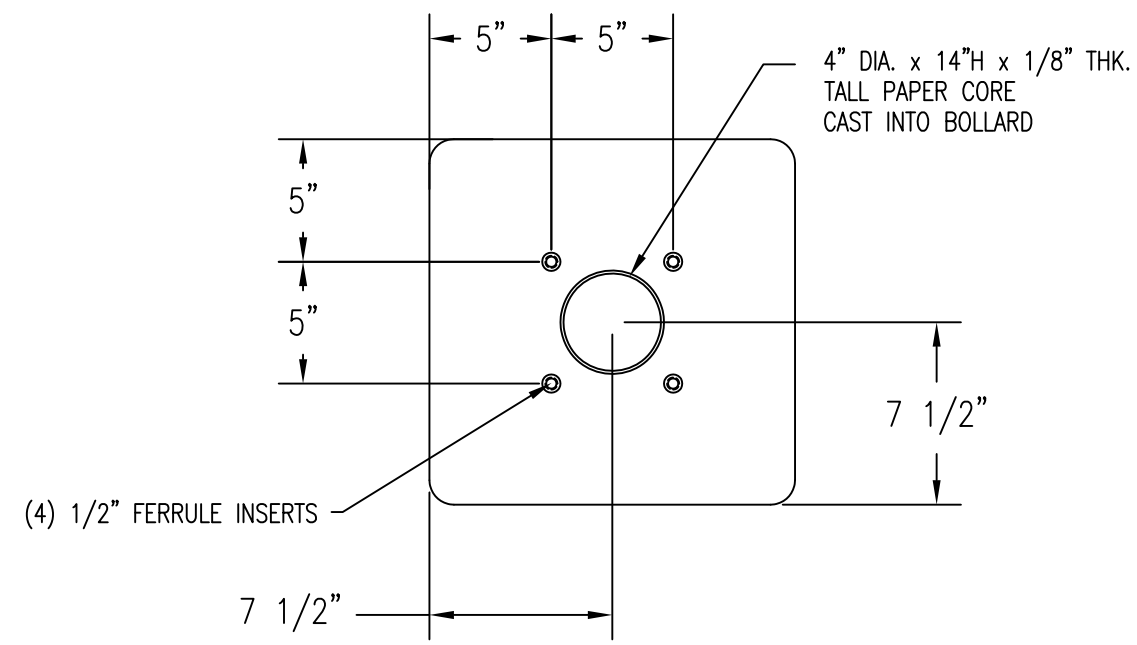

3 BOTTOM VIEW - STACKING RINGS

Scale: 1-1/2" = 1'

WAUSAU TILE SITE FURNISHINGS

P.O. BOX 1520 WAUSAU, WISCONSIN 54402-1520 800/388-8728
E-MAIL: WTILE@WAUSAUTILE.COM
WEB SITE: WWW.WAUSAUTILE.COM

REVISIONS					
NO.	DATE	BY	NO.	DATE	BY
1	2/21/13	AKG	4		
2			5		
3			6		

DRAWN BY AKG	JOB		MATERIAL CONCRETE
JOB NO.	LOCATION		WEIGHT 270 LBS
SCALE AS NOTED	UNLESS OTHERWISE SPECIFIED DIMENSIONS ARE IN INCHES TOLERANCES: ± 1/8"	DATE 2/6/13	ITEM NO. TF6312
FINISH OPTIONS			DWG. NO.