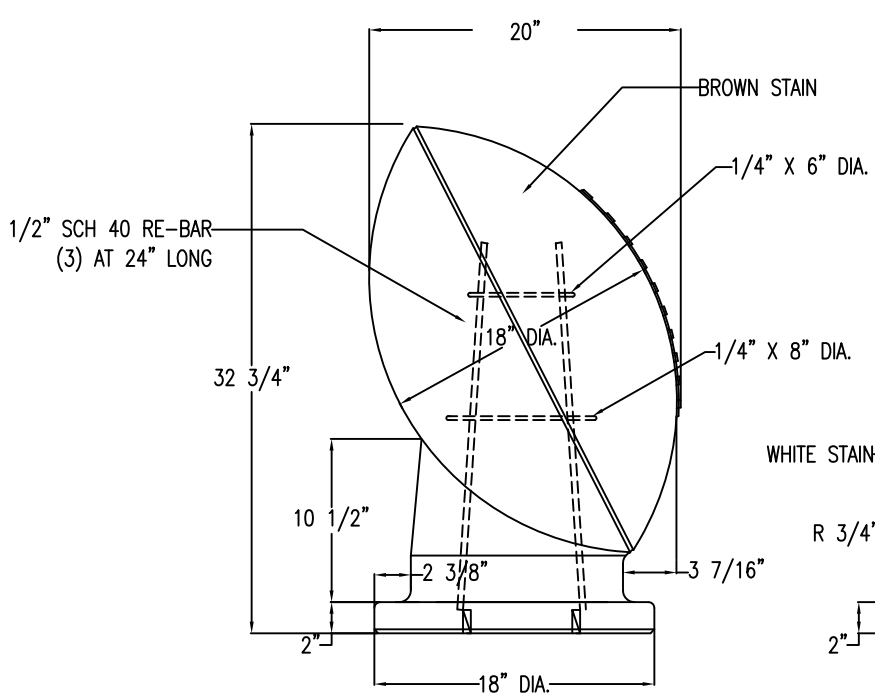

SIDE VIEW

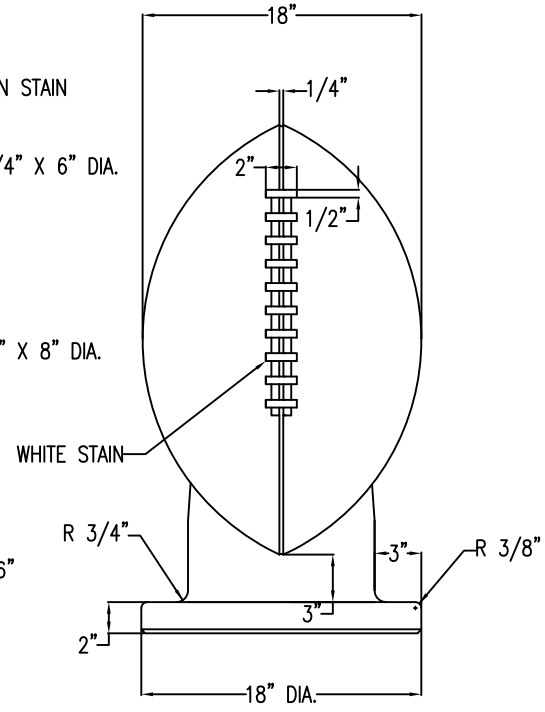

FRONT VIEW

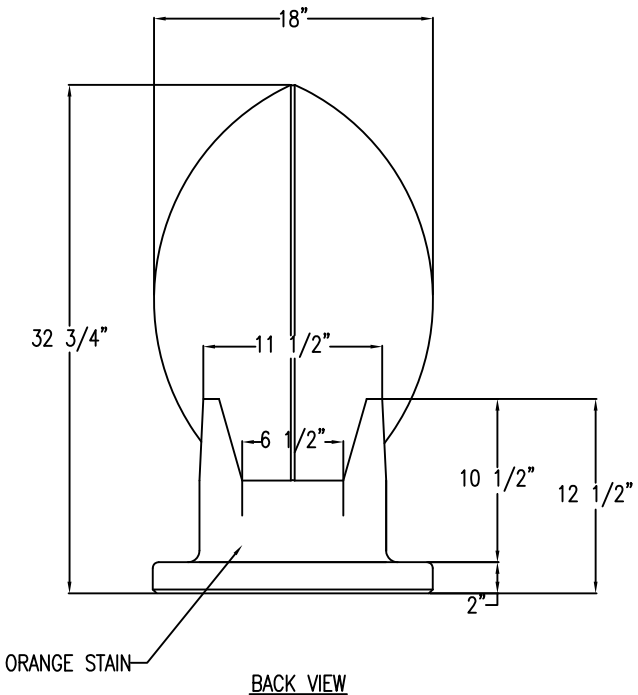

BACK VIEW

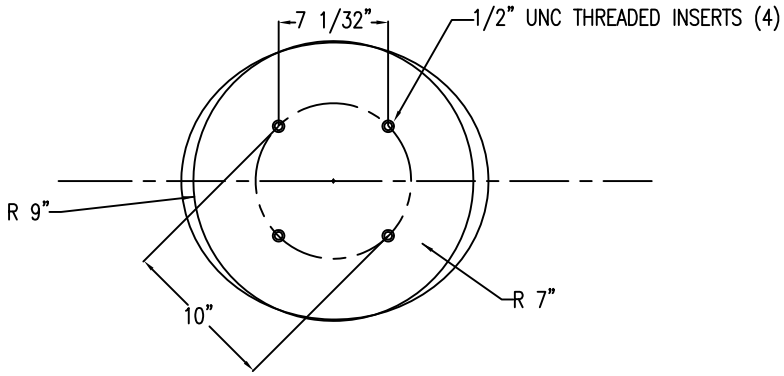

BOTTOM VIEW

CONFIDENTIAL INFORMATION

These drawings, specifications and the other information and documents accompanying them are the confidential and proprietary property of Wausau Tile, Inc. The drawings themselves shall belong to the owner for use only on this project, Any additional use shall require the prior written approval of Wausau Tile, Inc. The proprietary information contained within the drawings and the documents is and shall remain the sole property of Wausau Tile, Inc.

Terra-Form Products	Terra-Paving Products	Precast Products

WAUSAU TILE

P.O. BOX 1520 WAUSAU, WISCONSIN 54402-1520 715/359-3121
P.O. BOX 967 BANNING, CALIFORNIA 92220 714/849-5995
P.O. BOX 659 LAKE HAMILTON, FLORIDA 33851-0659 813/439-7446

REVISIONS							
NO.	DATE	BY	NO.	DATE	BY	JOB FOOTBALL & STAND	LOCATION WAUSAU, WI
1	3/23/01	RJH	4			DESIGNED BY	DRAWING
2			5			DRAWN BY RJH / DATE 10/4/00	SCALE 1/4" = 1"
3			6			CHKD. / JOB NO.	DRWG. NO. 000-10-246