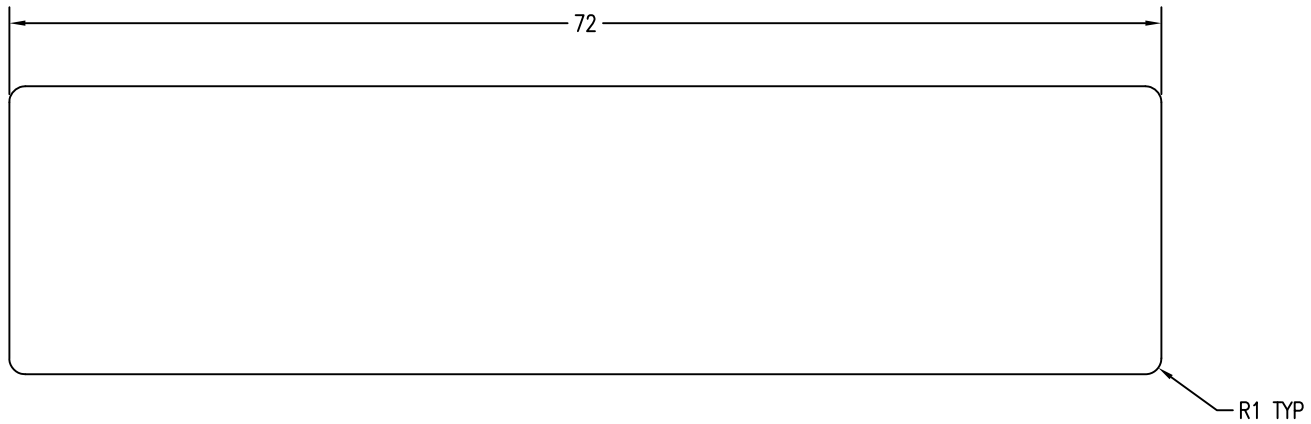


TOP VIEW BENCH

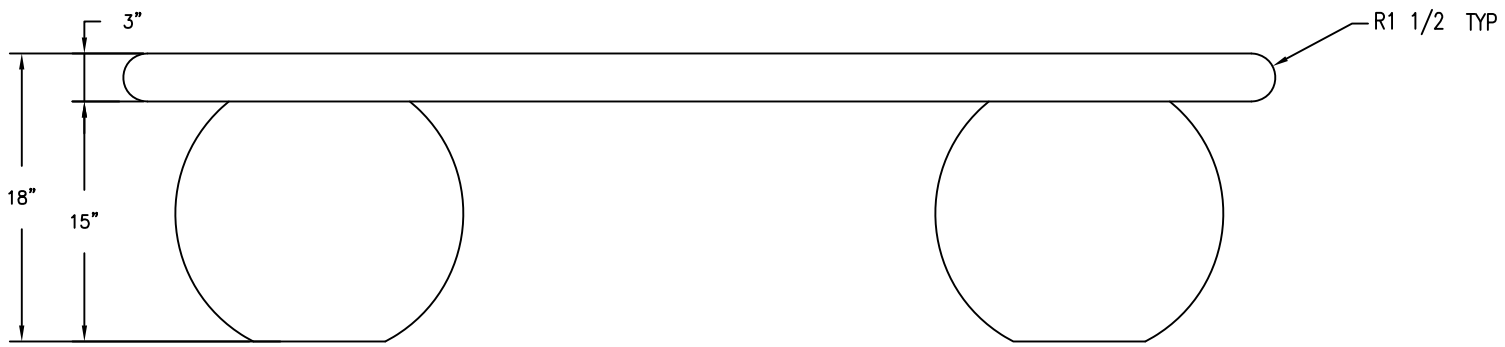


ELEVATION VIEW BENCH

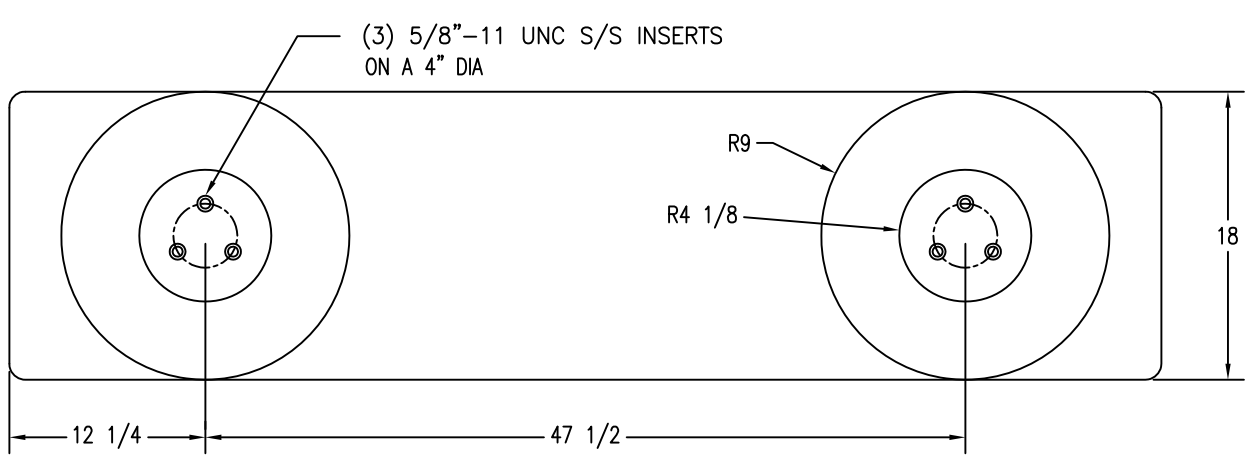


BOTTOM VIEW BENCH

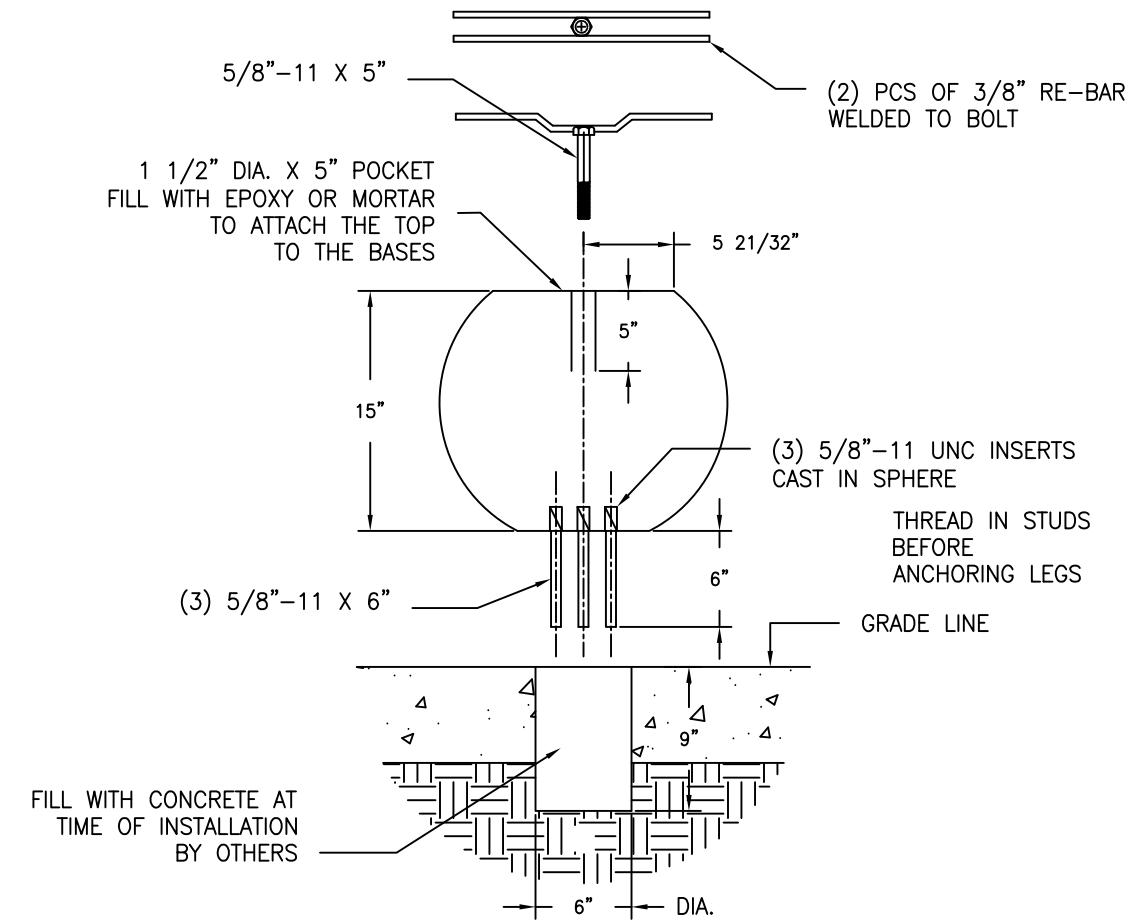


BOLLARD ANCHOR

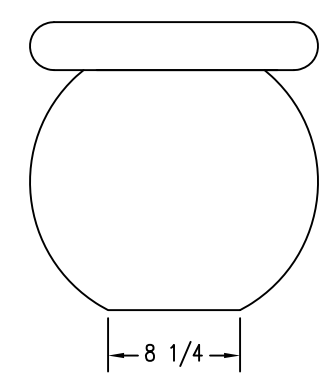


SIDE VIEW BENCH

**WAUSAU TILE SITE FURNISHINGS**

P.O. BOX 1520 WAUSAU, WISCONSIN 54402-1520 800/388-8728
P.O. BOX 967 BANNING, CALIFORNIA 92220 800/231-4636

| REVISIONS | | | | | | DRAWN BY | JOB | | MATERIAL |
|---|---|---|---|---|---|---|---|---|---|
| NO. | DATE | BY | NO. | DATE | BY | TITLE | JOB NO. | | WEIGHT |
| 1 | | | 4 | | | SCALE | UNLESS OTHERWISE SPECIFIED DIMENSIONS ARE IN INCHES ANGLES ±0.5° 2 PL ±0.01 3 PL ±0.005 | DATE 9-25-08 | FINISH OPTIONS |
| 2 | | | 5 | | | | | | DWG. NO. TF5142 |
| 3 | | | 6 | | | | | | |