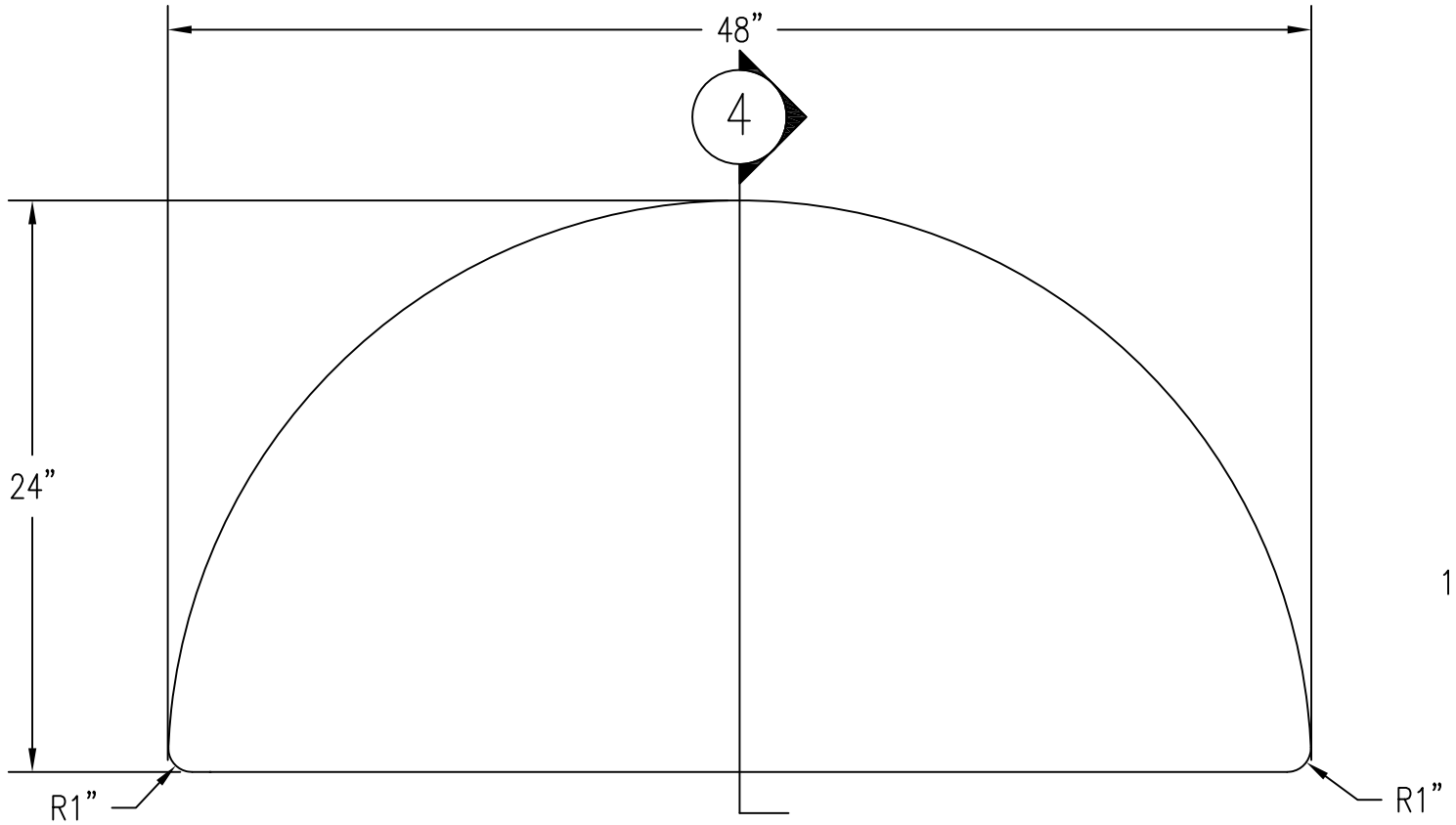

1 TOP VIEW
Scale: 1/8" = 1"

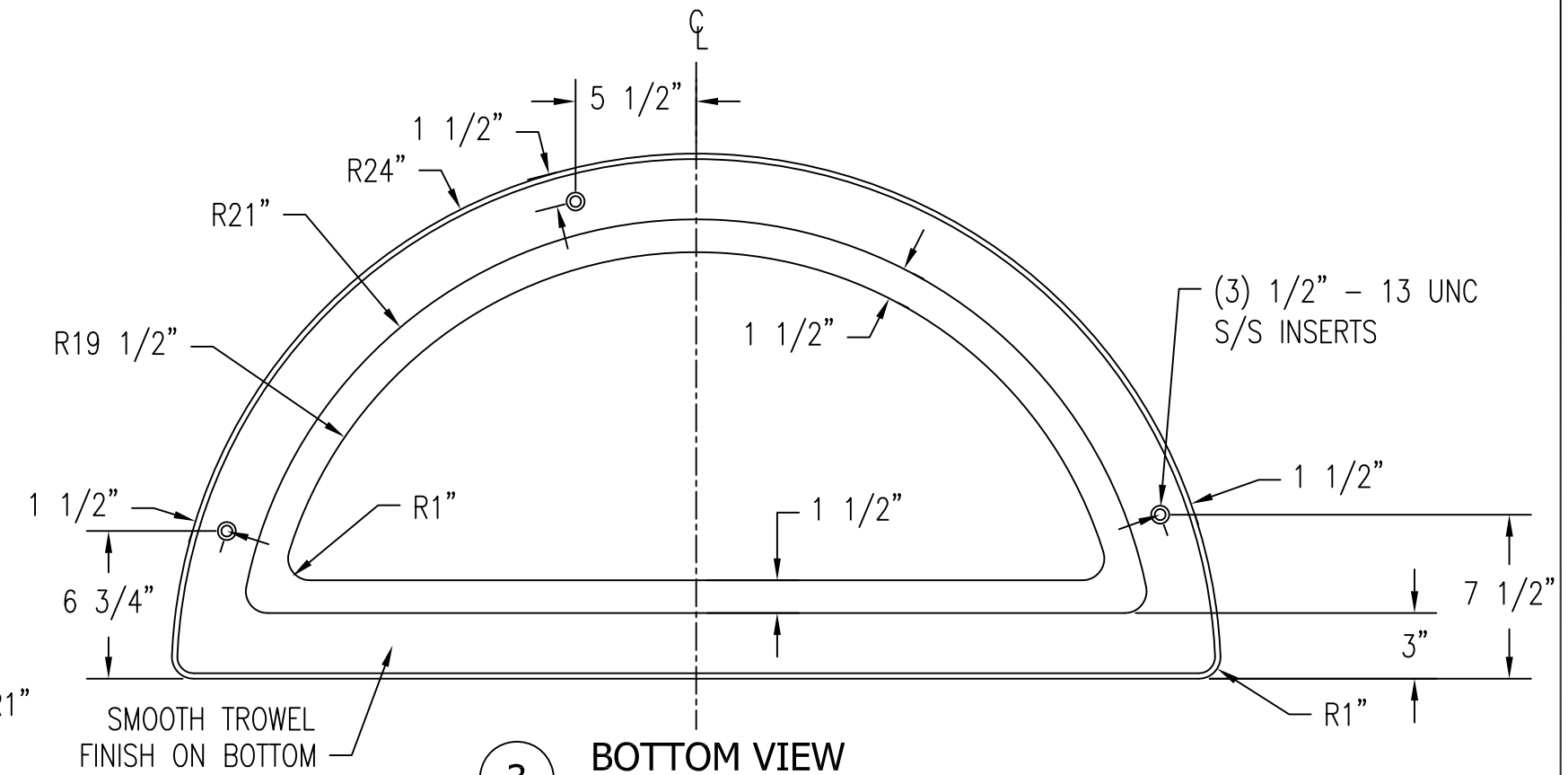

3 BOTTOM VIEW
Scale: 1/8" = 1"

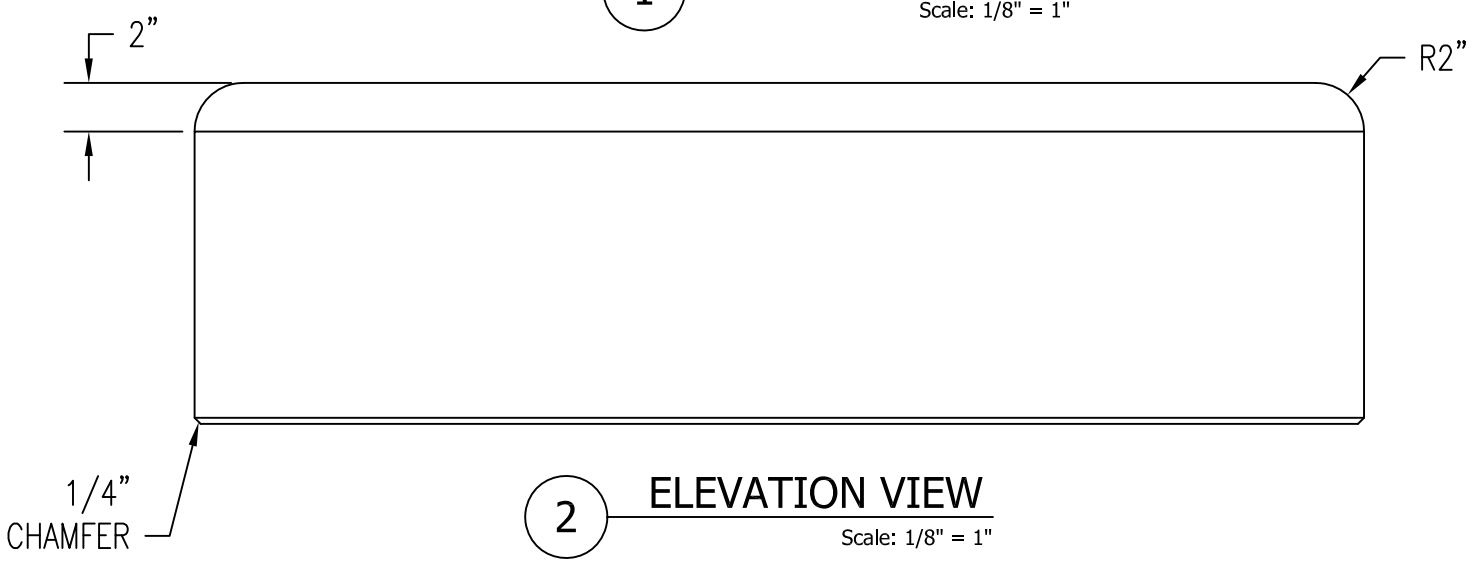

2 ELEVATION VIEW
Scale: 1/8" = 1"

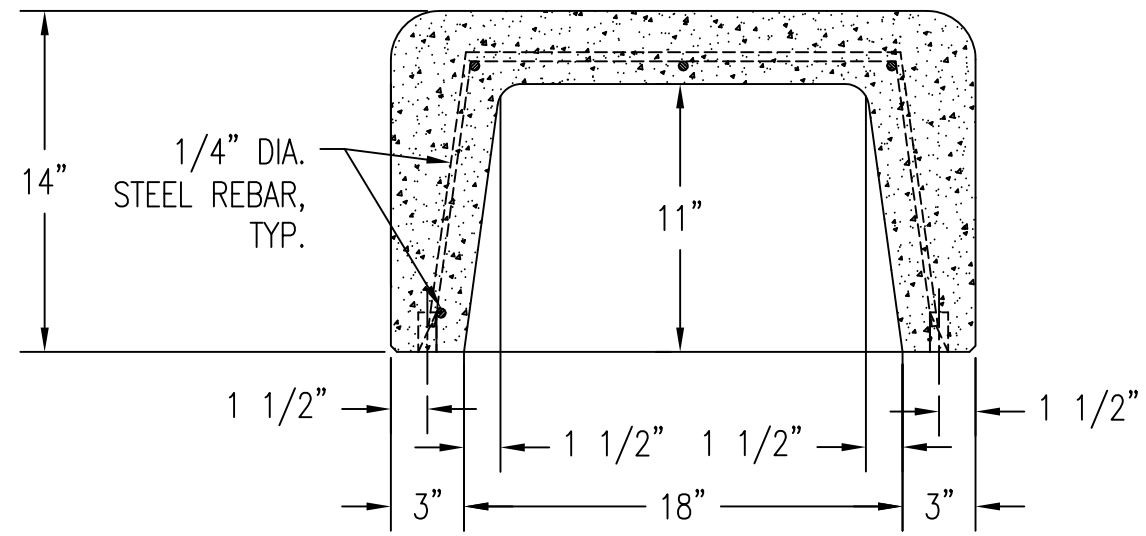

4 CROSS SECTION
Scale: 1/8" = 1"

USE STRAPS OR SLING TO HANDLE

WAUSAU TILE SITE FURNISHINGS

P.O. BOX 1520 WAUSAU, WISCONSIN 54402-1520 800/388-8728
E-MAIL: WTILE@WAUSAUTILE.COM
WEB SITE: WWW.WAUSAUTILE.COM

REVISIONS					
NO.	DATE	BY	NO.	DATE	BY
1			4		
2			5		
3			6		

DRAWN BY P.A.W.	JOB ?		MATERIAL CONCRETE
JOB NO. CO	LOCATION ?		WEIGHT 650 LBS
SCALE AS NOTED	UNLESS OTHERWISE SPECIFIED DIMENSIONS ARE IN INCHES TOLERANCES: ± 1/8"	DATE 7/10/09	ITEM NO. TF5100
		FINISH OPTIONS	DWG. NO. 1 OF 1