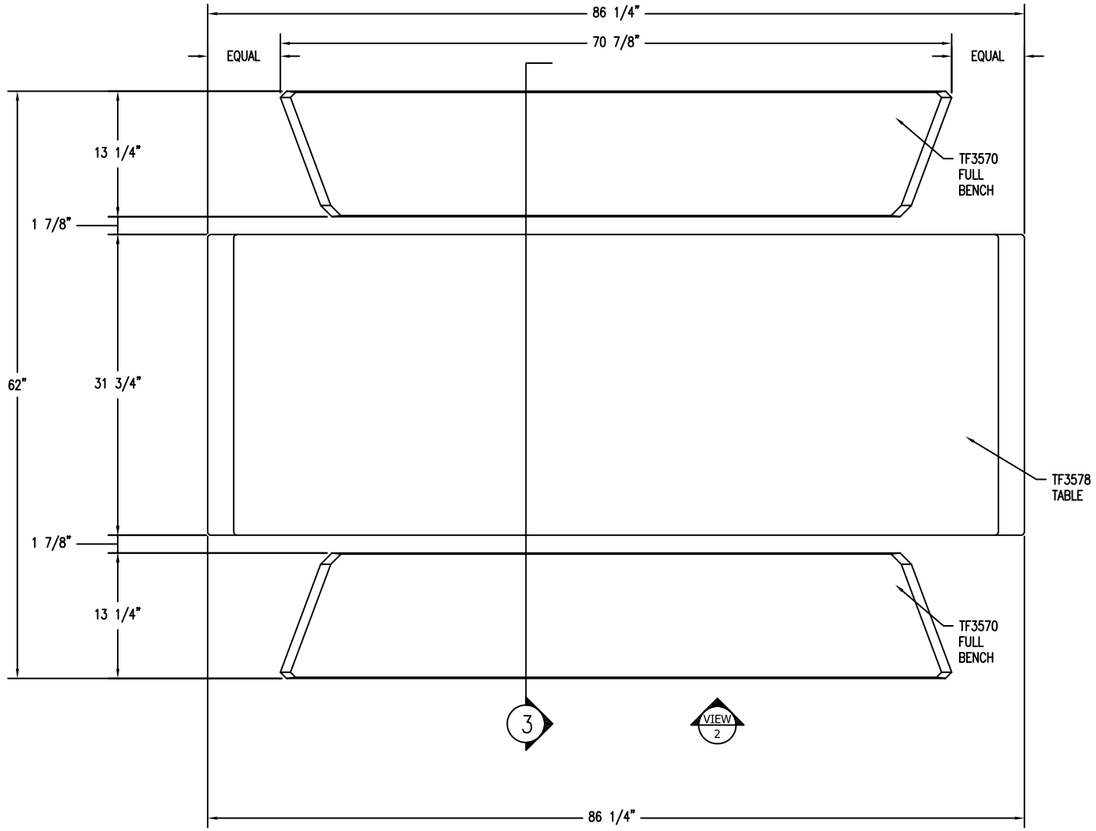

1 TOP VIEW
Scale: 1/8" = 1"

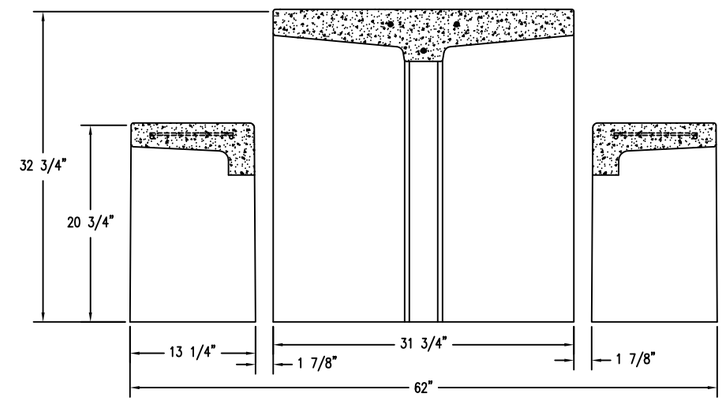

3 SECTION VIEW
Scale: 1/8" = 1"

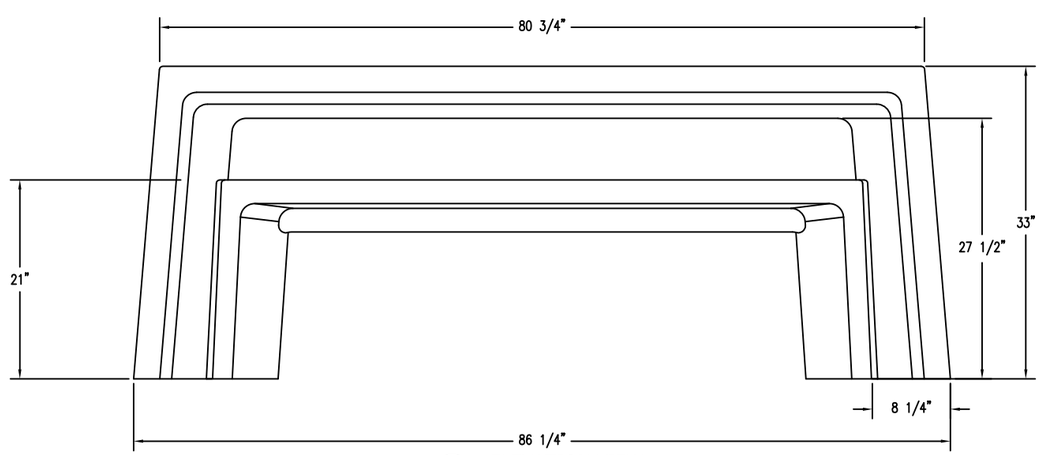

2 ELEVATION VIEW
Scale: 1/8" = 1"

WAUSAU TILE SITE FURNISHINGS

P.O. BOX 1520 WAUSAU, WISCONSIN 54402-1520 800/388-8728
E-MAIL: WTILE@WAUSAUTILE.COM
WEB SITE: WWW.WAUSAUTILE.COM

REVISIONS					
NO.	DATE	BY	NO.	DATE	BY
1			4		
2			5		
3			6		

DRAWN BY P.A.W.	JOB		MATERIAL CONCRETE
JOB NO.	LOCATION		WEIGHT 2,040 LBS
SCALE AS NOTED	UNLESS OTHERWISE SPECIFIED DIMENSIONS ARE IN INCHES TOLERANCES: ± 1/8"	DATE 4/22/10	ITEM NO. TF3200
FINISH OPTIONS			DWG. NO. 1 OF 1