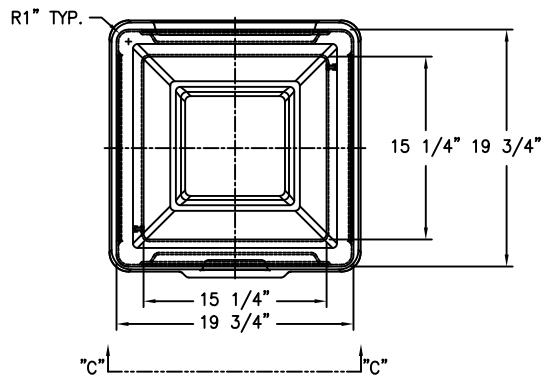

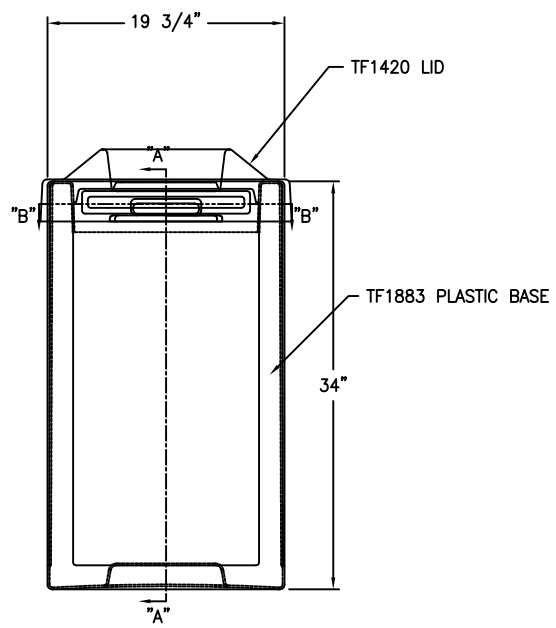

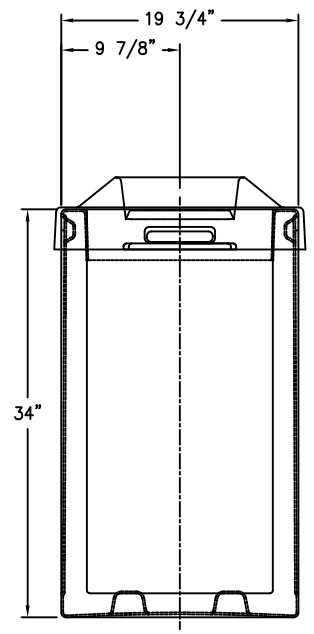

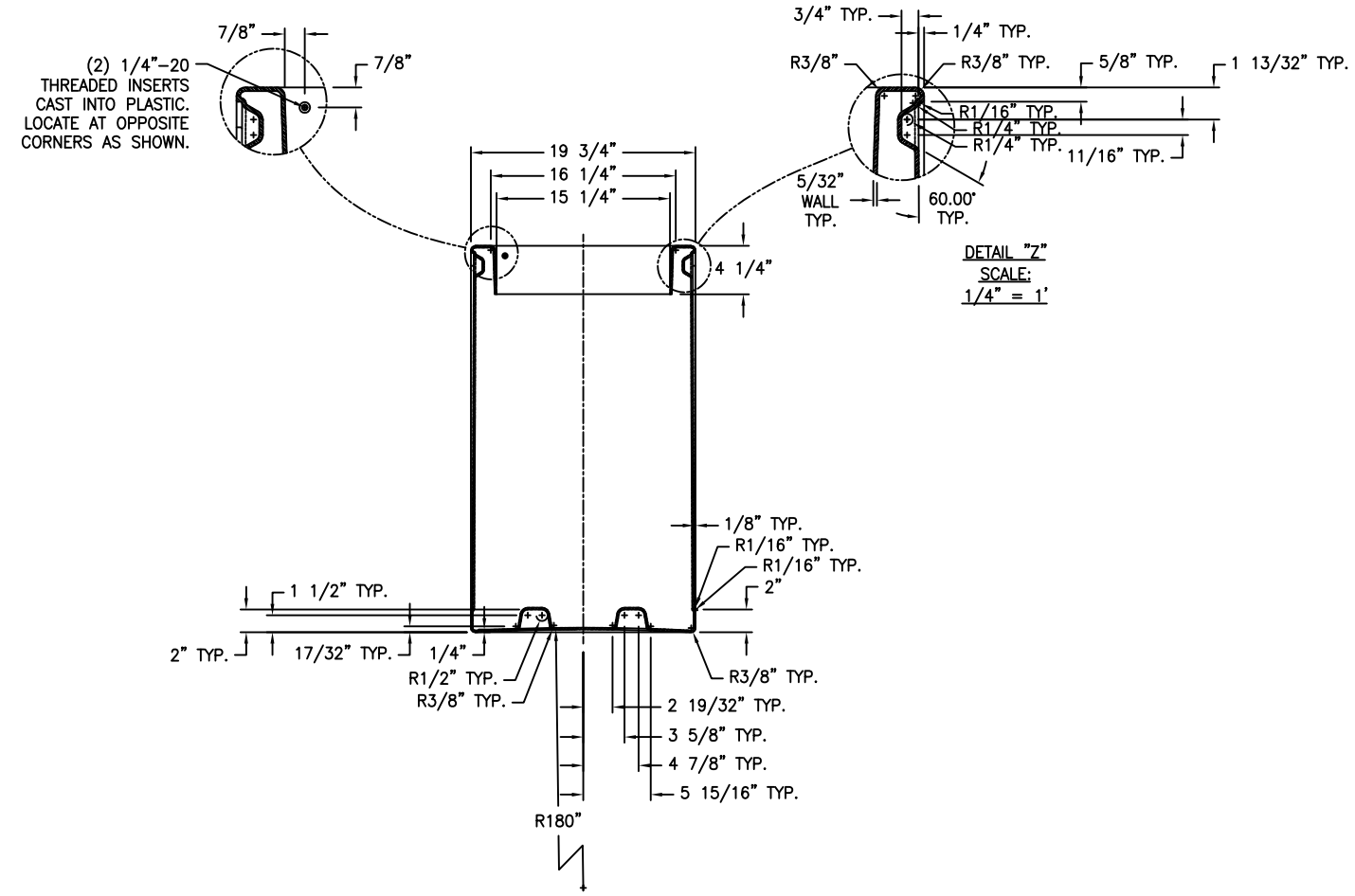

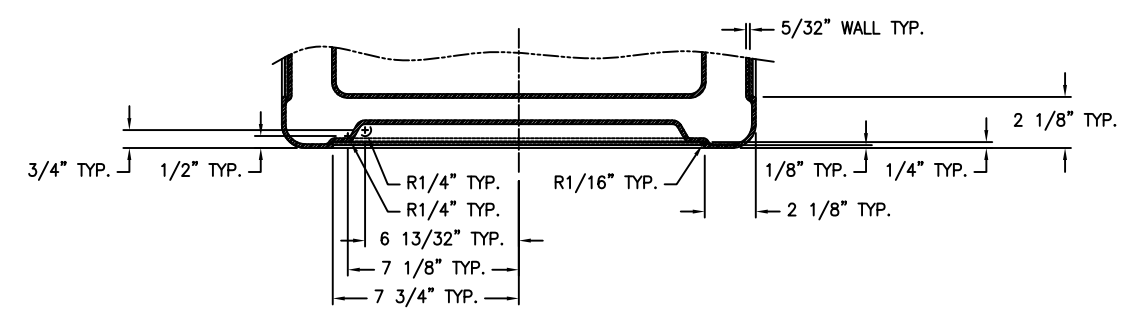

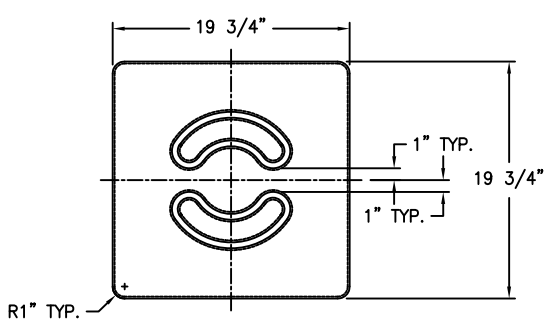

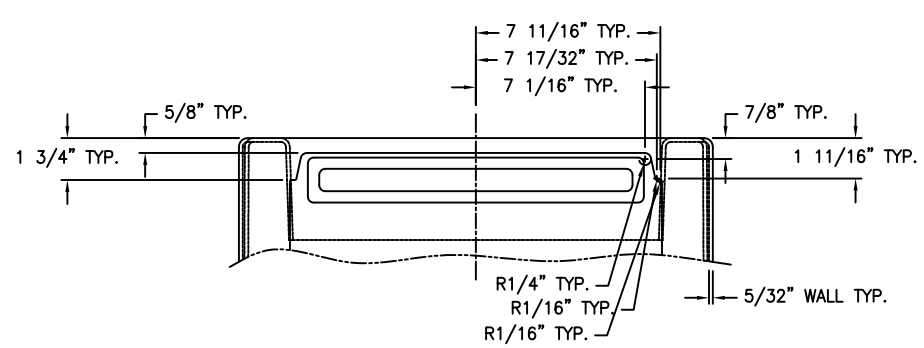

WAUSAU TILE SITE FURNISHINGS						P.O. BOX 1520 WAUSAU, WISCONSIN 54402-1520 800/388-8728 E-MAIL: WTILE@WAUSAUTILE.COM WEB SITE: WWW.WAUSAUTILE.COM			
REVISIONS						DRAWN BY JPZ	JOB		MATERIAL LLDPE
NO.	DATE	BY	NO.	DATE	BY	TITLE WASTE CONTAINER	JOB NO.		WEIGHT
1			4						
2			5			SCALE 1/8" = 1"	UNLESS OTHERWISE SPECIFIED DIMENSIONS ARE IN INCHES ANGLES ±0.5° FRACTIONS ± 1/64" 2 PL ±0.01 3 PL ±0.005	DATE 12/31/13	FINISH OPTIONS
3			6						DWG. NO. TF1013