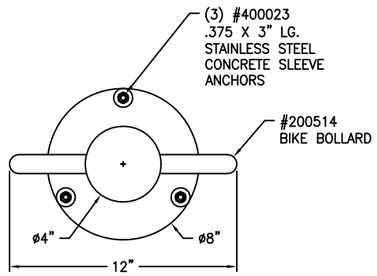

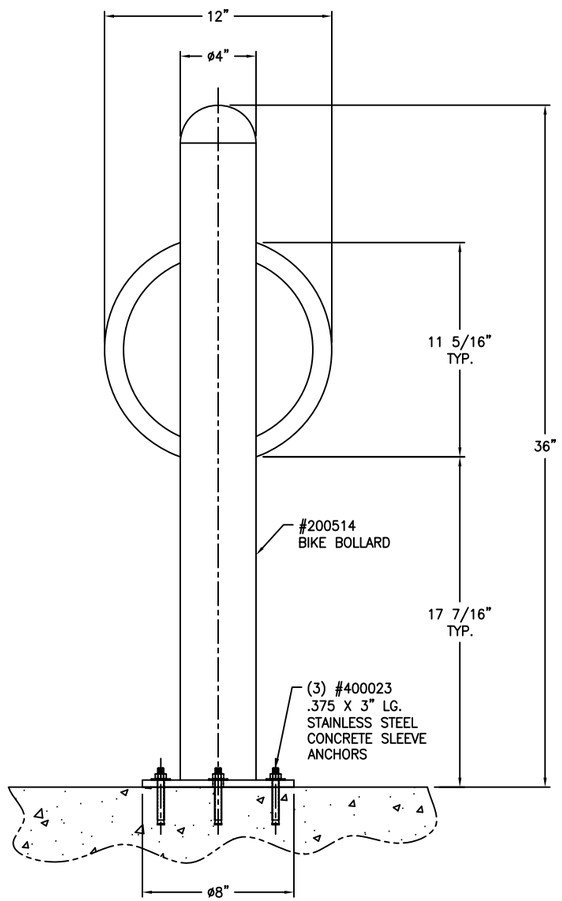

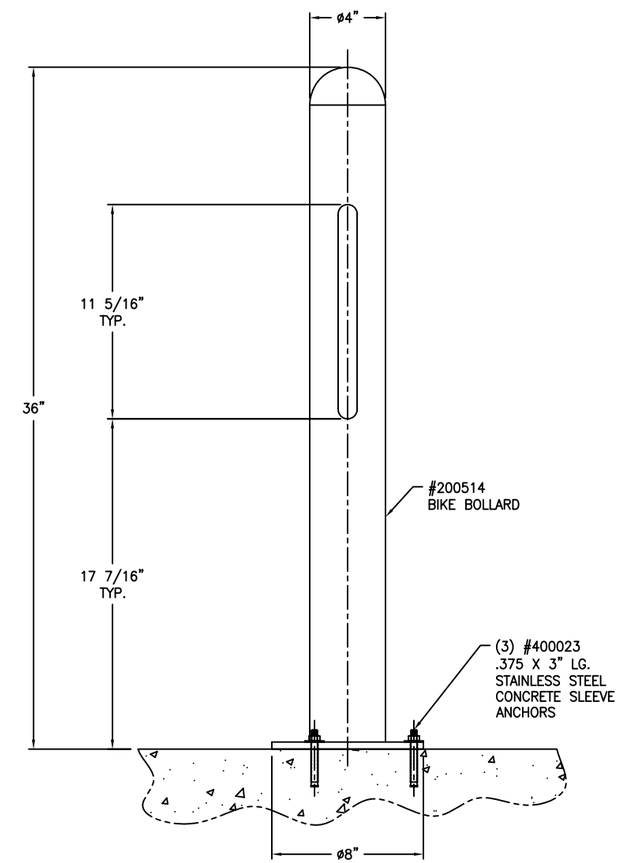

REV	DESCRIPTION	NAME	DATE
1	-------	---	--/--/--

WAUSAU TILE

P.O. BOX 1520 WAUSAU, WISCONSIN 54402-1520 800/388-8728
E-MAIL: WTILE@WAUSAUTILE.COM
WEB SITE: WWW.WAUSAUTILE.COM

DRAWN BY: M JOHNSON	TITLE: BIKE BOLLARD – SURFACE MOUNT		MATERIAL: –
JOB NO.	JOB		WEIGHT
SCALE: 1/4" = 1"	UNLESS OTHERWISE SPECIFIED DIMENSIONS ARE IN INCHES ANGLES ±0.5° FRACTIONS ± 1/64" 2 PL ±0.01 3 PL ±0.005	DATE: 5/10/11	FINISH OPTIONS
		D	DWG. NO. 9005