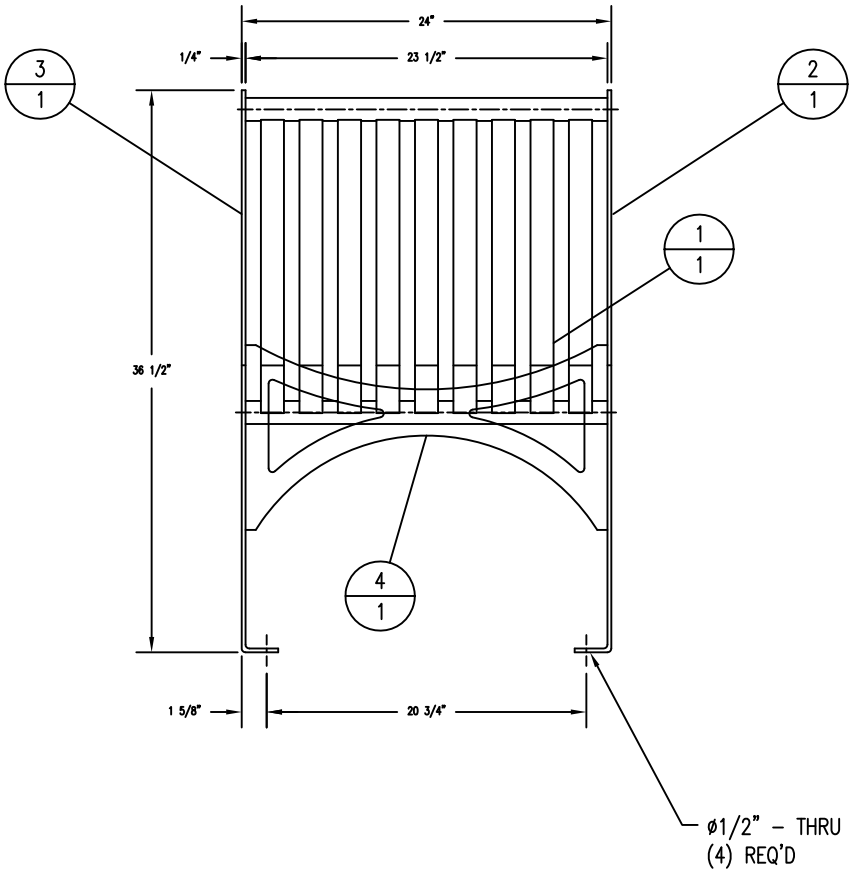

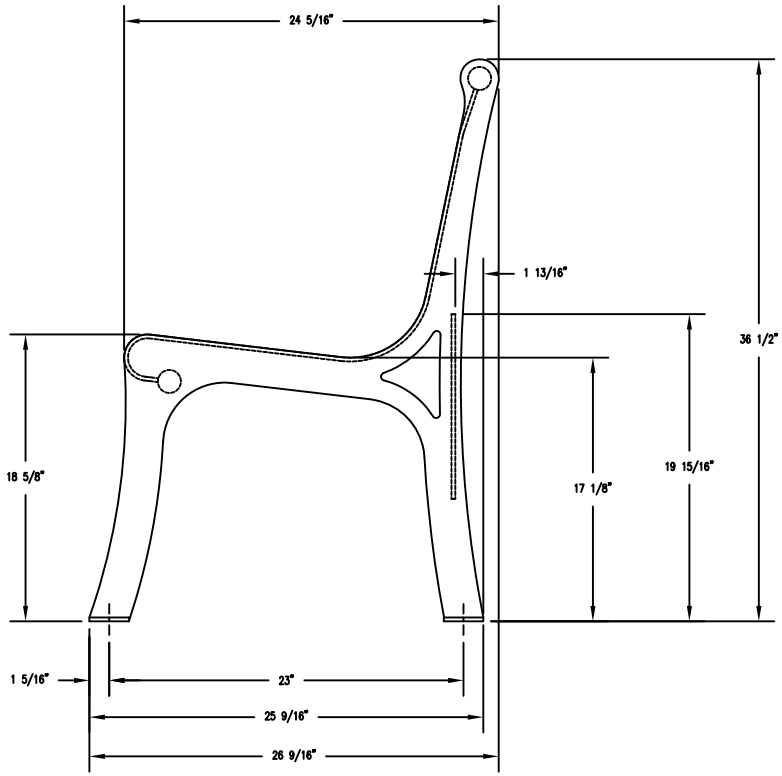

ITEM NUMBER	DRAWING NUMBER	QUANTITY
1	700432	1
2	700435	1
3	700431	1
4	700468	1

WAUSAU TILE SITE FURNISHINGS

P.O. BOX 1520 WAUSAU, WISCONSIN 54402-1520 800/205-6728
P.O. BOX 967 BANNING, CALIFORNIA 92220 877-949-5695

REVISIONS						DRAWN BY	JOB	MATERIAL
NO.	DATE	BY	NO.	DATE	BY	TITLE	JOB NO.	WEIGHT
1	05/08/08	MJS	4			SCALE	UNLESS OTHERWISE SPECIFIED DIMENSIONS ARE IN INCHES ANGLES ±0.5° 2 PL ±0.01 3 PL ±0.005	DATE / FINISH OPTIONS
2			5					
3			6			CHECKED		DWG. NO. MF2217