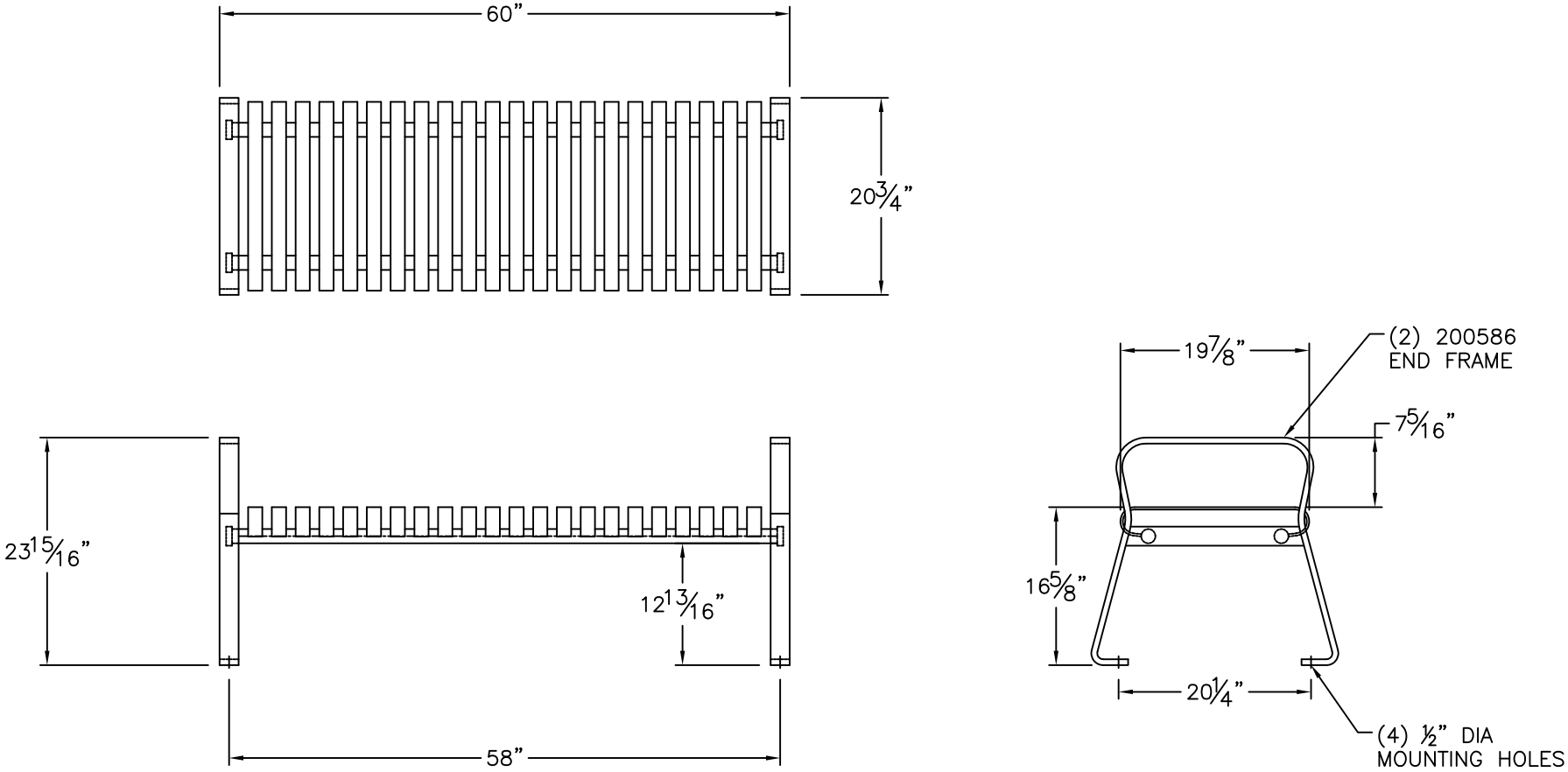

WAUSAU TILE SITE FURNISHINGS

P.O. BOX 1539 WAUSAU, WISCONSIN 54402-1539 800/388-6728
P.O. BOX 967 DANVILLE, CALIFORNIA 92229 800/223-1839

REVISIONS						DRAWN BY	JOB	MATERIAL
NO.	DATE	BY	NO.	DATE	BY	LJHE		
1			4			TITLE	JOB NO. 5 FT. BENCH W/O BACK	WEIGHT
2			5			SCALE	UNLESS OTHERWISE SPECIFIED DIMENSIONS ARE IN INCHES ANGLES ±0.5° 2 PL ±0.01 3 PL ±0.005	DATE / FINISH OPTIONS
3			6					DWG. NO. MF2209