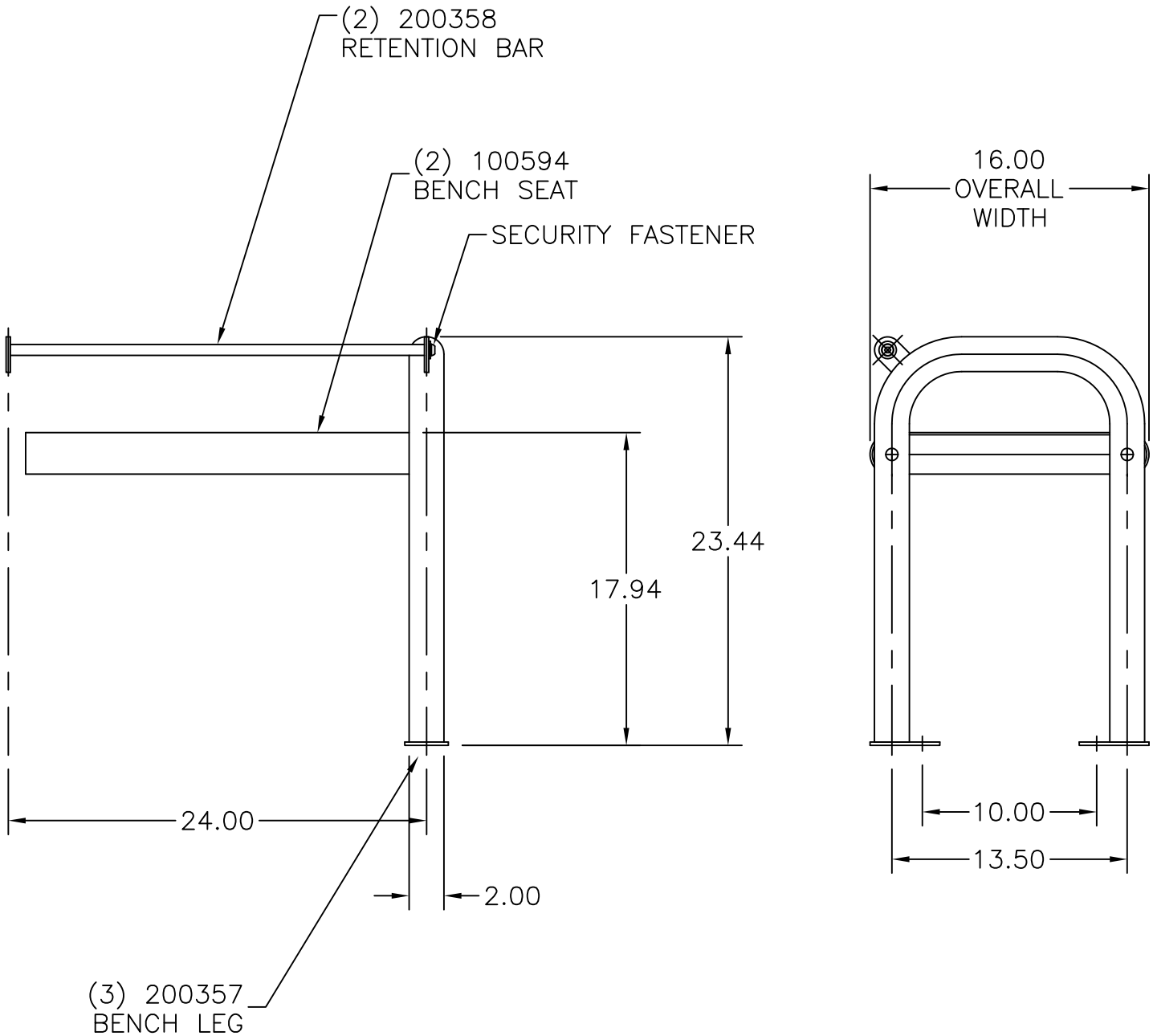

WAUSAU TILE SITE FURNISHINGS								
REVISIONS						DRAWN BY LBE	JOB	MATERIAL
NO.	DATE	BY	NO.	DATE	BY	TITLE	JOB NO.	WEIGHT
1			4			SCALE	UNLESS OTHERWISE SPECIFIED DIMENSIONS ARE IN INCHES ANGLES ±0.5° 2 PL ±0.01 3 PL ±0.005	DATE 11-14-08 FINISH OPTIONS
2			5					
3			6			CHECKED		DWG. NO. MF2083