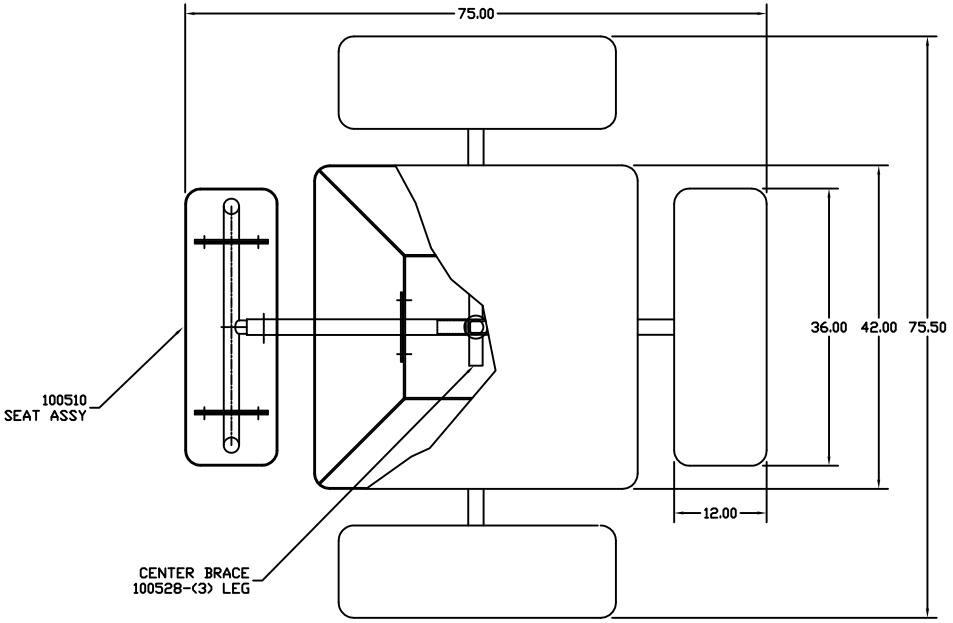

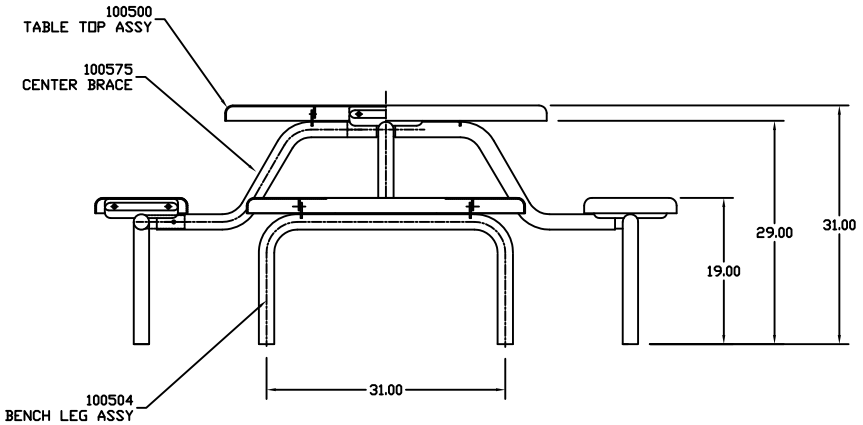

REV	DESCRIPTION	NAME	DATE
1	------	---	--/--/--

WAUSAU TILE

P.O. BOX 1520 WAUSAU, WISCONSIN 54402-1520 800/388-6728
E-MAIL: WAU@WAUSAUTILE.COM
WEB SITE: WWW.WAUSAUTILE.COM

DRAWN BY M JOHNSON	TITLE –		MATERIAL –
JOB NO.	JOB		WEIGHT
SCALE –	UNLESS OTHERWISE SPECIFIED DIMENSIONS ARE IN INCHES ANGLES ±0.5° FRACTIONS ± 1/64" 2 PL ±0.01 3 PL ±0.005	DATE –	FINISH OPTIONS
		D	DWG. NO. 351---